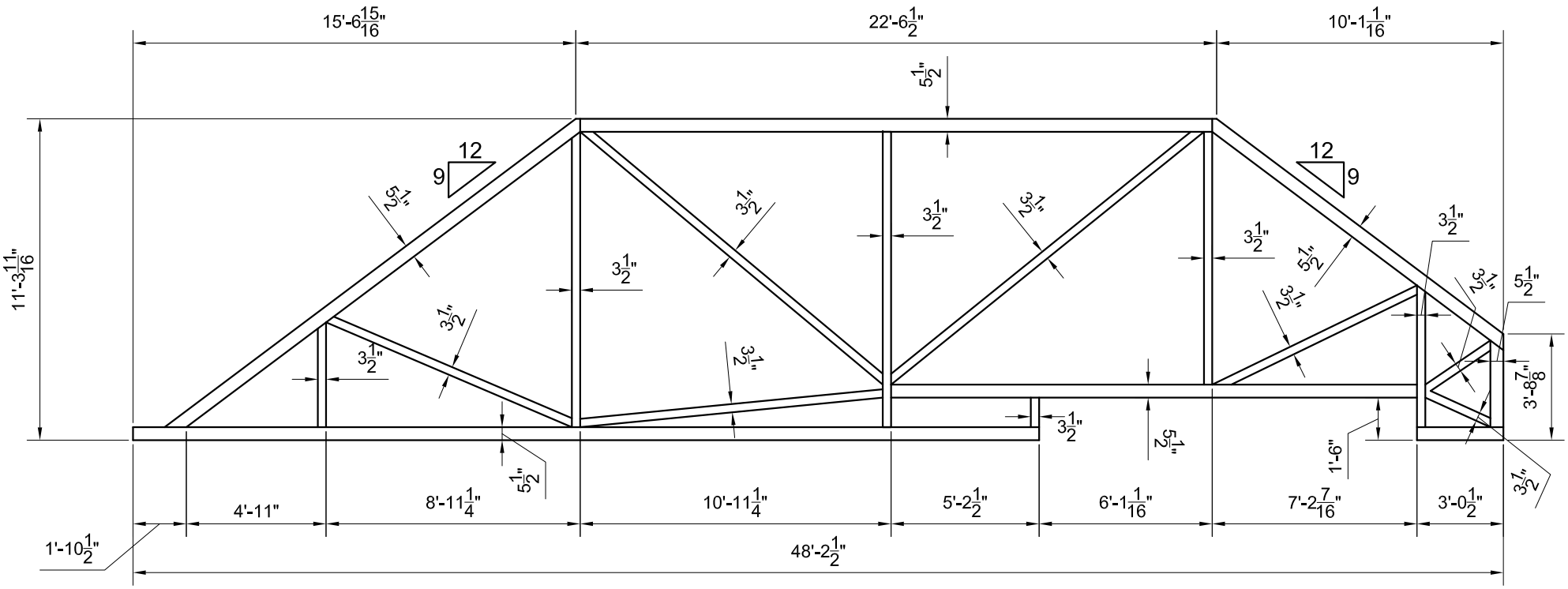
15'-6 15/16"
22'-6 1/2"
10'-1 1/16"
5 1/2"
12
9
12
9
2 5/16"
3 1/2"
3 1/2"
2 5/16"
3 1/2"
5 1/2"
3 1/2"
2 5/16"
3 1/2"
3 1/2"
3 1/2"
3 1/2"
3 1/2"
5 1/2"
5 1/2"
2 5/16"
3'-8 7/8"
11'-3 11/16"
1'-6"
3 1/2"
4'-11"
8'-11 1/4"
10'-11 1/4"
5'-2 1/2"
6'-1 1/16"
7'-2 7/16"
3'-0 1/2"
1'-10 1/2"
48'-2 1/2"